DSP6510 10W Coaxial Frame-less Ceiling Speaker

Features

- Drive units:6.5"×1， 0.75"×1,coaxial alumnium speaker
- Rated power (RMS):10W
- Rated Voltage:100V
- Sensitivity (1m, 1W):93±2dB
- Max. SPL(1m):103±2dB
- Frequency response:90Hz-18KHz
- Dimension of product: Φ190×80mm

Description

This product is a coaxial two frequency ceiling type speaker,with a wide range of sound diffusion, large output power. Easy installation fear,can reproduce the voice and music. It's an ideal choice for you to install a ceiling mounted speaker and require perfect sound quality. It is able to bear the double rated powers within a short period, so as to ensure the high reliability of the loudspeaker under extreme conditions, prolong the service life, and reduce the possibility of occurrence of fault or degradation of performance to a great extent.

Specification

Model	DSP6510
Drive units	6.5”x 1　　0.75”x 1
Rated Power	10W
Rated Voltage	100V
Sensitivity (1m, 1W)	93±2dB
Max. SPL(1m)	103±2 dB
Frequency response	90Hz-18KHz
Dimension of product	Φ190×80mm
Net Weight	1.0 KG

Frequency response characteristics
(dB SPL、1W、1m)

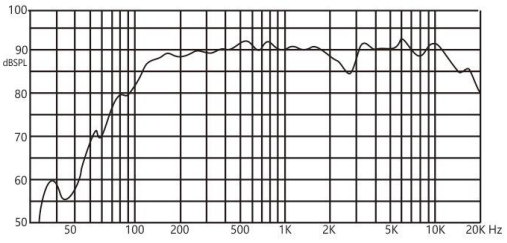

Distortion characteristic
(THD< 5% 1W、1m、100Hz-10kHz)

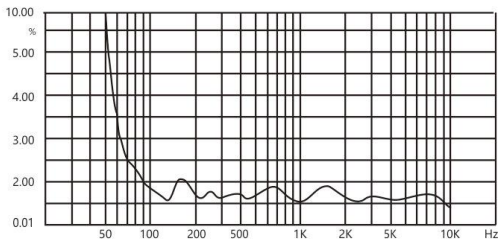

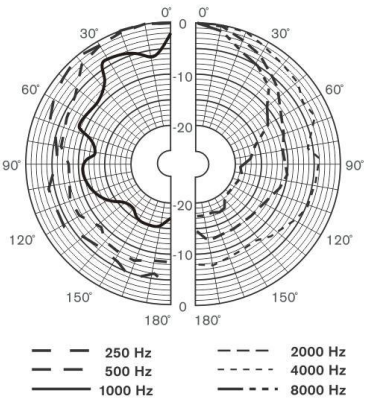

Vertical directivity pattern

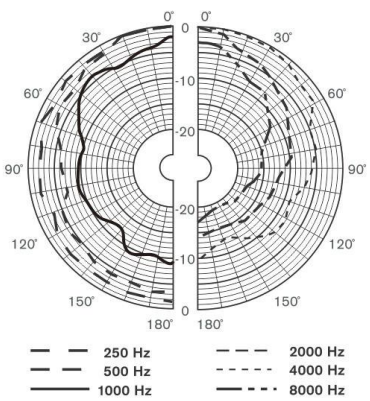

Horizontal directivity pattern